THE UNIVERSITY OF MELBOURNE

PHYC10004

SCHOOL OF PHYSICS
SEMESTER 2 EXAMINATION

FRIDAY 2 NOVEMBER 2018

EXAMINATION QUESTION PAPER

SEAT NUMBER										
STUDENT ID										

Do NOT write your name anywhere on your examination papers.

SUBJECT NAME:	PHYSICS 2: PHYSICAL SCIENCE AND TECHNOLOGY
SUBJECT CODE:	PHYC10004
EXAM DURATION:	3 hours NOT including reading time.
READING TIME:	15 MINUTES
TOTAL MARKS:	150 marks
NUMBER OF PAGES:	14 PAGES (INCLUDING THIS PAGE)

AUTHORISED MATERIALS

1. All students are authorised to have writing materials, and clear pencil cases in their possession.
2. Students are permitted to use only the University's authorised calculator
3. Students ARE NOT permitted to use: any dictionary.
4. Electronic devices – including lap tops, tablets, mobile phones and electronic dictionaries- are NOT authorised.

INSTRUCTIONS TO INVIGILATORS

1. This paper must REMAIN in the room and be collected at the end of the exam.
2. This Exam is NOT an open book exam. NO notes or books are permitted.
3. Students will require: this paper and TWO (2) script books.
4. Students are NOT permitted to annotate during reading time.
5. The final two pages of this exam paper contain formulae and data for the use of students. These pages may be detached, but students may NOT retain any part.

INSTRUCTIONS TO STUDENTS

1. This Exam is NOT an open book exam. NO notes or books are permitted.
2. Write your seat number and student ID number in the boxes at the top of this page at the START of WRITING TIME.
3. Attempt ALL questions. The total number of marks is 150.
4. Write your answers: on the RULED PAGES of your script book/s ONLY. Blank pages are for rough working out and will not be marked.
5. Two pages of formulae and data are attached to the paper. Detach these pages for use. Hand the pages to a supervisor with your completed examination paper at the end of writing time.
6. ALL communications-enabled & network accessible devices MUST be switched OFF & placed under your seat.

EXAMINATION REPRINTS

1. This paper may be lodged with the library.

Student: you are reminded that:

- Failure to follow examination instructions constitutes misconduct.
- You MUST NOT have any unauthorised materials or items with you that could be used to cheat, be unscholarly and/or gain an unfair advantage over other students.
- Unauthorised item/s must be declared and, wherever possible, surrendered to a supervisor.
- Penalties apply for misconduct.
- Any student found cheating, suspected of cheating, who attempts to cheat and/or who enables others to cheat in an exam is engaging in academic misconduct.
- Students found to have engaged in general or academic misconduct face penalties ranging from exclusion from the University to a fine, losing credit for the examination and/or the termination of their enrolment.
- A supervisor will submit a report in writing about incidents of alleged misconduct to the University.
- If you do not have photo ID with you, you will need to report to the Chief Supervisor at the end of the exam and have your photo taken.

Before your exam

- Please place your student card on top left hand corner of your desk.
- Empty your pockets and place all excess items under your desk or in the bin.
- Please read and review your question paper during reading time. Unless you are permitted to annotate your paper, you <u>must not</u> write during reading time.
- If you need assistance from a supervisor, including materials or a toilet break, raise your hand. Wait until the supervisor attends to you. Do NOT leave your seat without permission.
- Wireless communications, mobile phones and any device other than an authorised device must be switched off and placed under your desk.
- If you do not have your student card, please place another form of photo identification such as your passport or driver's licence, in the top left hand corner of the desk, instead.

During your exam

- You may not leave in the first half hour or the last fifteen minutes of any University of Melbourne examination.
- You must not communicate with, receive assistance from, or copy from the paper of another student, at any time during your exam.
- You must obey the reasonable instructions of the examination supervisors.
- Supervisors will inspect desks and materials that you access. Unauthorised material will be confiscated. You may be reported for possessing unauthorised items.

In an emergency

- In the event of fire, or an emergency evacuation, leave all examination material where it is. Make your way to the nearest exit. Assemble away from the building, in line of sight of a fire warden who will be wearing a hard hat. Await further instructions.

Signals and warnings at the end of your exam

- A warning signal will be given ten minutes ahead the end of your examination. After the signal, you are NOT permitted to leave the venue and must wait until dismissed.
- At examination's end a final signal will be given. The Chief Supervisor will order 'pens down'. You must cease writing and put your pen down, when ordered to do so.
- At exam's end place your papers in a bundle. Place any loose leaf sheets inside the front cover of your question paper OR insert all your documents inside the front cover of one of your script books.
- Remain seated. Do NOT move from your seat until the Chief Supervisor announces that students are dismissed from the room.
- DO NOT switch on your mobile phone, or use any other device, until you are OUTSIDE the venue.
- Photography is NOT permitted within any University examination or assessment venue.

QUESTION 1 Electrostatics **[2 + 4 + 2 + 2 = 12 marks]**

Four point charges are arranged as in the diagram below. Charges Q_1 and Q_2, each with charge $-2q$ C, are placed a distance, a m, apart at the base of an equilateral triangle. A further negative charge Q_3 with charge, $-q$ C, is placed at the top of the triangle and the last charge, Q_4 with charge $+q$ C, is placed a distance, x m, directly below Q_3.

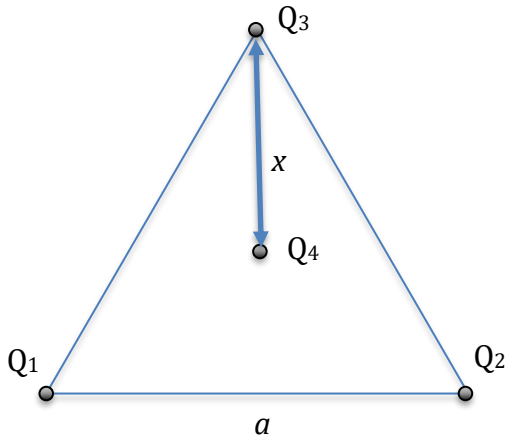

a) Draw and label all the forces acting on Q_3, including relative direction and magnitude.

b) Find an expression for the net force on Q_3 charge at the top of the triangle due to the other three charges in terms of q, a and x.

c) Determine the direction of the net force on Q_3 if $x = \frac{1}{2}a$.

d) Determine the value of x in terms of a and q where the net force on Q_3 is zero.

QUESTION 2 Gauss's Law **[(3 + 4) + 8 + 2 + 5 + 3 = 25 marks]**

A non-uniform electric field, $\vec{E}$, is given by the relationship $\vec{E} = (2.0x^2\hat{\imath} - 3.0\hat{\jmath})NC^{-1}$ where x is the distance in meters along the $\hat{\imath}$ axis.

A 2 m gaussian cube in the electric field is orientated with one corner at the origin as shown in the diagram below;

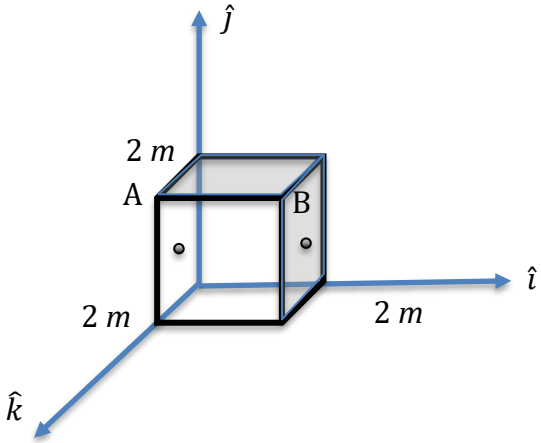

a) Determine the electric flux through the
   i) top and
   ii) right-side
   faces of the gaussian cube. (shown by the shaded faces in the diagram)

b) Using arguments of symmetry, show the total electric flux through the gaussian cube is 32 N m^2 C^{-1}.

c) Calculate the charge inside the gaussian cube.

d) Find the potential difference due to the electric field from point A on the left-hand side to point B on the right-hand side of the cube.

e) If the cube was now replaced by a sphere of radius 1 m and centred at position (1,1,1), would the total flux change? Explain your answer.

QUESTION 3 Electric Circuits **[8 + 3 = 11 marks]**

A circuit consisting of three cells and five resistors as shown in the diagram below;

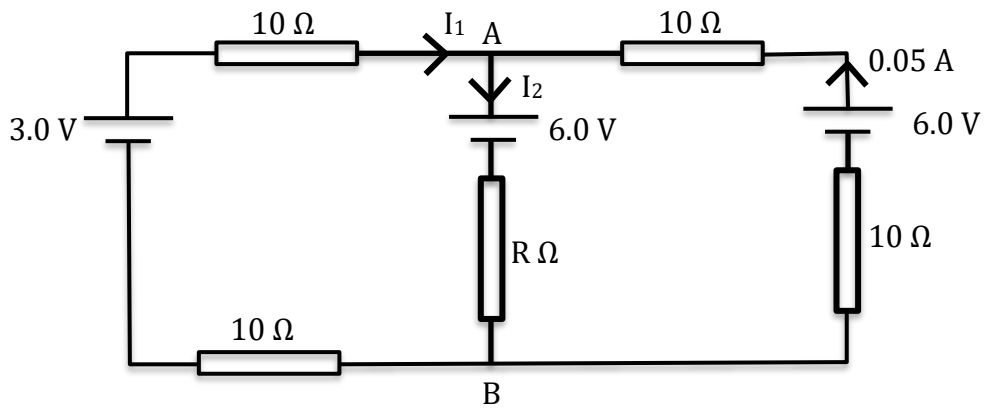

The left-most cell is 3 V and the remaining two cells are 6 V. The outer resistors have a resistance of 10 Ω and the central resistor, *R*, is unknown. An ammeter measures a current of 0.05 A through the right-most cell. The currents I_1 and I_2 are also unknown.

a) Determine the value of the central resistor, *R*.

b) Calculate the voltage drop across the points A-B as indicated in the diagram using TWO circuit pathways.

QUESTION 4 Electromagnetism **[3 + 1 + 6 + 2 = 12 marks]**

Choose ONE of the following electromagnetic phenomena and discuss points i – iv. Use no more than one page. Clearly state which phenomena you have chosen on your paper.

a) Faraday cage.

b) Meisner Effect.

c) Displacement current.

   i) Briefly describe the effect using diagrams where appropriate.

   ii) State which of Maxwell's Equations best describes the phenomenon.

   iii) Discuss how the phenomenon occurs in terms of the appropriate electromagnetic theory.

   iv) Provide a brief description for a use of this phenomena.

QUESTION 5 Relay Switch **[4 + 4 + 1 + 1 + 5 = 15 marks]**

Two Physics students, Ivory and Chen, are working on a design for a relay switch for their electric bike. A simple relay switch consists of a solenoid with iron core. Once a small current is passing through the solenoid through the input circuit by turning the ignition key, the iron core is magnetised and attracts a metal lever, iron armature, which in turn connects a secondary circuit by connecting contacts C. The output circuit will then turn on the motor of the bike. A diagram of a relay switch is shown below;

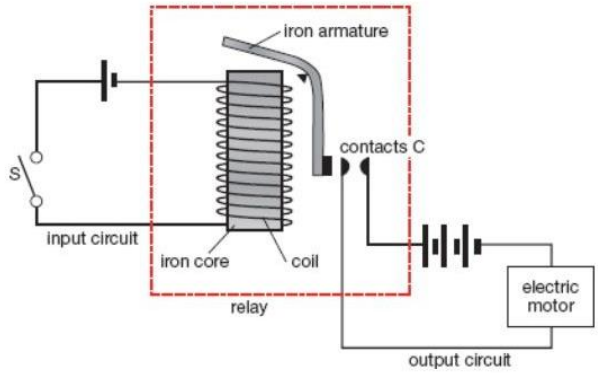

Initially, Ivory wants to investigate the type of wire they will use to determine the strength of magnetic field the solenoid will be able to generate. The team chooses a long insulated, current-carrying wire with direct current, *I*, through the wire of 2.0 mA and the radius, *R*, of 0.5 mm.

a) Close examination of the cross-section of the wire shows the wire is hollow with a radius of 0.1 mm and a uniform distribution of current throughout the conductor. Draw a graph of the strength of the magnetic field versus the distance to 5 mm from the centre of the wire, r. Include relevant scale and key points on your graph.

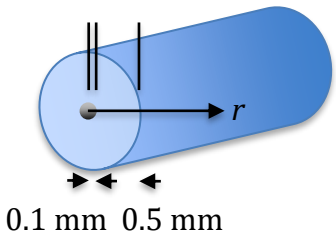

b) Ivory arranges the centre of the wire in a semi-circle with radius of 5 mm. Using the Biot-Savart Law, determine the *magnitude* of the magnetic field and its *direction* due to the wire at point C as shown in the diagram below.

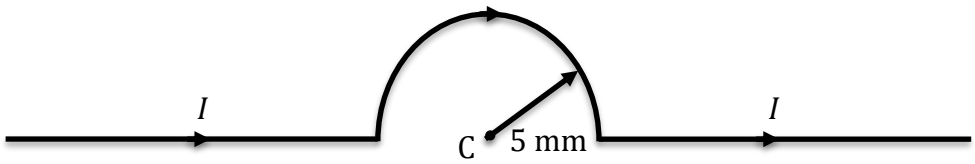

Question continued next page.

Using Ivory's wire, Chen now looks at designing the solenoid by winding a long length of wire into *n* circular loops with a radius of 5 mm.

c) Chen calculated the magnetic field required to trigger the switch needs to be 5 x 10^{-4} T. Show that almost 200,000 turns in the solenoid will be required to produce a magnetic field of this size without an iron core?

d) Calculate the permittivity of the iron core required to create this magnetic field with a more reasonable, 40 turns in the solenoid.

e) Now that the input circuit has been designed, Chen states that because there is a direct current in the solenoid, Faraday's Law says a magnetic field won't be induced in the iron core and hence the switch won't close in the output circuit. Ivory disagrees and is convinced the relay switch will work. Who is correct? Justify your answer.

QUESTION 6 Fluids **[2 + 1 + 4 + 2 + 2 = 11 marks]**

A water reservoir, *A*, whose free-surface is kept at a pressure 2 atm, discharges to another reservoir, *B*, open to the atmosphere. The water free-surface level at the second reservoir is Δz = 0.5 m above the pressurized reservoir *A*. The horizontal connecting duct has a constant

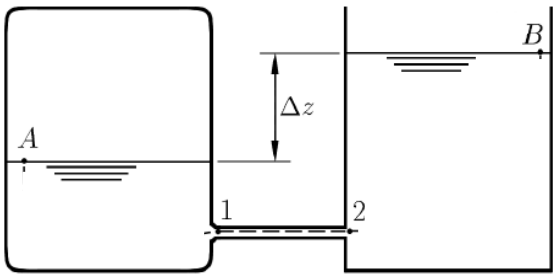

diameter.

a) What is the pressure due to water and air at a generic point on the surface A and the duct inlet (point 1)?
b) What is the pressure at the outlet (point 2) due to reservoir *B*?
c) Use now the Bernoulli equation between surface A and point 2 to compute the water velocity in the connecting duct.
d) Would the velocity at the duct exit (point 2) change if the diameter of the connecting duct (1 to 2) is not constant? Justify your answer.
e) What is the pressure difference between the duct inlet (1) and outlet (2) if the duct is horizontal and of constant diameter?

(water density1 x 10^3 kg/m^3)

QUESTION 7 Heat and Work **[(1 + 2 + 2 + 3 + 2) + 3= 13 marks]**

a) A large closed plastic bag contains 0.1 m^3 of gas at initial temperature of 15 °C and with the same pressure of the surroundings, 1 atm. The bag is left in the sunlight and the gas warms up to 43 °C, expanding to 0.11 m^3 after absorbing 3.7 kJ of heat energy. Assuming the pressure does not change and using the ideal gas model, determine

i) the molar mass of the gas contained in the bag.
ii) how much work is done by the gas in the bag.
iii) calculate the internal energy of the gas in this transformation.
iv) is it possible to tell if the gas is mono or diatomic? Explain your answer.
v) Can the gas absorb heat without getting hotter? Justify your answer.

b) In the kinetic theory of gasses explain what is meant by the "equipartition of energy".

QUESTION 8 Particle wave duality **[3 + (2 + 2 + 2 + 3) + 2 + 2 = 16 marks]**

a) In a photoelectric experiment, light of different wavelengths is shone on an unknown metal. It is observed that when a wavelength larger than 293 nm is used no electrons are emitted. Considering that the potassium, chromium, zinc and tungsten have work functions 2.26, 4.24, 4.42 and 4.49 eV respectively, identify which is possibly the unknown metal. Justify your answer.

b) X-rays having an energy of 500 keV undergo Compton scattering from a target. The scattered rays are detected at 45° relative to the incident rays. Find:

i) The Compton shift at this angle.
ii) The energy of the scattered x-ray.
iii) The energy of the recoiling electron.
iv) The ratio of the photon wavelength to the electron wavelength. What do you learn from their comparison?

c) Explain why we cannot measure simultaneously with the same accuracy the wavelength and position of a photon.

d) If the wavelength of a photon is 500 Å and is known with an accuracy of 10^{-7}. What is the minimum uncertainty in the position of the photon?

QUESTION 9 The black body **[(2 + 2 + 2) + (2 + 2) = 10 marks]**

a) The universe is filled with relic radiation from the early stage of the universe – the so-called Cosmic Microwave Background (CMB) radiation. When the universe was about 300,000 years old, the temperature of the CMB was 3,000K. Assuming the universe is a black body

i) Estimate λ_{max} of the emitted radiation at this stage of the universe.
ii) Assuming the universe at that time was a sphere of 4×10^{21} km^2 surface area, how much power does it radiate?
iii) Find the spectral power per wavelength at $\lambda_{max.}$

b) Although the CMB emitted a spectrum of waves all having different wavelengths, model its whole power output as carried by photons of wavelength λ_{max}:

i) Find the energy of one photon.
ii) Find the number of photons it emits each second.

QUESTION 10 The atom **[3 + (2 + 2 + 2 + 3)) = 12 marks]**

a) In the Bohr model of the atom, is hypothesised that stable electrons orbits have a quantized angular momentum $L=\frac{h}{2\pi}n$. Explain briefly why the postulate of stationary states is in contradiction with classical mechanics and electromagnetism?

b) The muon is equivalent to an "electron" with a mass about 200 times larger and has the same charge. It is possible to form a muonic atom, where the muon takes the place of an electron in the orbit around the nucleus. Calculate

i) The Bohr radius of the muonic atom.
ii) The muonic atom energy levels in terms of the principal quantum number.
iii) The energy of the photon emitted when a muon makes a transition from n=2 to n=1.
iv) Compare the results obtained with the one for the normal atom. What do you conclude?

QUESTION 11 The nucleus, nuclear decays **[3 + 3 + 2 + 3 + 2= 13 marks]**

A bottle shop has a very expensive bottle of wine that is about 5 years old. The wine contains a number of different atoms with radioactive isotopes of oxygen, hydrogen and carbon. A customer wants to buy the bottle but wants to be sure that the year of production is correct. The radioactive isotopes in the wine include carbon-14, ^{14}C with a half-life of 5730 yr, oxygen-15, ^{15}O with a half-life of 122.2 s and hydrogen-3, ^{3}H (tritium) with a half-life of 12.33 yr. The activity of each isotope is known at the time the bottle was sealed (^{14}C : 0.23 Bq per gram of carbon, ^{15}O: 7 x 10^{10} Bq per gram of oxigen, ^{3}H: 3.6 x 10^{14} Bq per gram of hydrogen).

a) Calculate the activity for each isotope after 5 years.
b) Which one of these 3 radioactive isotopes can be used to date the wine, if the activity of each isotope is known at the time the bottle was sealed? Justify your answer.
c) Find the nuclear radius of the oxygen and carbon isotopes.
d) How much energy is released when a $^{14}_{6}C$ decays to $^{13}_{7}N$ by beta emission?
e) Calculate the binding energy of the tritium given that its atomic mass is 3.0160492 u.

End of examination questions; Equations and data sheet follows.

This Page is intentionally left BLANK

Formula Sheet and Useful Data for PHYC10004 (may be detached)

Page 1 of 2

Constants

Mass of electron, m_e	9.11×10^{-31} kg	Bohr radius, a_B	0.529×10^{-10} m
Mass of proton, m_p	1.67×10^{-27} kg	Rydberg constant, R	1.097373×10^{7} m^{-1}
Mass of neutron, m_n	1.67×10^{-27} kg		
Electron charge magnitude, e	1.6×10^{-19} C	Stephan-Boltzmann constant, σ	5.67×10^{-8} W m^{-2} K^{-4}
Permeability of free space, μ_o	$4\pi \times 10^{-7}$ T m A^{-1}	Boltzmann constant, k	1.38×10^{-23} J K^{-1}
Permittivity of free space, ε_o	8.85×10^{-12} C^2 N^{-1} m^{-2}	Speed of light in vacuum, c	3.00×10^{8} m s^{-1}
Universal gas constant, R	8.31 J K^{-1} mol^{-1}	Gravitational acceleration, g	9.8 m s^{-2}
Avagadro's number, N_A	6.02×10^{23} mol^{-1}	1 eV = 1.6×10^{-19} J	
Specific heat capacity of ice	2220 J K^{-1} kg^{-1}	Planck's constant, $h = 6.63 \times 10^{-34}$ J s $= 4.14 \times 10^{-15}$ eV s	
Specific heat capacity of water	4187 J K^{-1} kg^{-1}	Latent heat of fusion for water	333 kJ K^{-1}

Formulae

Electromagnetism		
$\boldsymbol{F} = \frac{q_1 q_2}{4\pi\varepsilon_o r^2}\hat{r}$	$\boldsymbol{E} = \frac{\boldsymbol{F}}{q}$	$V(P) = \int_P^{\infty} \boldsymbol{E}.d\boldsymbol{s} = \frac{U(P)}{q}$
$W = -\Delta U$	$\boldsymbol{E} = \frac{q}{4\pi\varepsilon_o r^2}\hat{\boldsymbol{r}}$	$V = \frac{q}{4\pi\varepsilon_o r}$
$\oint \boldsymbol{E}.d\boldsymbol{A} = \frac{q}{\varepsilon_o}$	$\Delta V = -\int_{P_2}^{P_1} \boldsymbol{E}.d\boldsymbol{s}$	$\boldsymbol{p} = q\boldsymbol{d}$ $\boldsymbol{\tau} = \boldsymbol{p} \times \boldsymbol{E}$ $U = -\boldsymbol{p}.\boldsymbol{E}$
$V = iR$	$P = iV = \frac{V^2}{R} = i^2 R$	$\frac{V_S}{V_p} = \frac{N_S}{N_p}$
$C = \frac{Q}{V}$	$U = \frac{1}{2}qV = \frac{1}{2}CV^2 = \frac{1}{2}\frac{q^2}{C}$	$C = \frac{A\varepsilon_o}{d}$
$\varepsilon = \kappa\varepsilon_0$	$U_E = \frac{1}{2}\kappa\varepsilon_o E^2$	$i = \frac{dq}{dt} = enAv_d$
$\boldsymbol{F} = q\boldsymbol{v} \times \boldsymbol{B}$	$\boldsymbol{F} = i\boldsymbol{l} \times \boldsymbol{B}$	$\oint \boldsymbol{B}.d\boldsymbol{A} = 0$
$B = \mu_o n i$	$\Phi_E = \int \boldsymbol{E}.d\boldsymbol{A}$	$\Phi_B = \int \boldsymbol{B}.d\boldsymbol{A}$
$\xi = -\frac{d\Phi_B}{dt}$	$\oint \boldsymbol{E}.d\boldsymbol{s} = -\frac{d\Phi_B}{dt}$	$\oint \boldsymbol{B}.d\boldsymbol{s} = \mu_o i + \mu_o i_D$
$i_D = \varepsilon_o \frac{d\Phi_E}{dt}$	$\mu = i \times (area\ of\ loop)$	$\boldsymbol{\tau} = \boldsymbol{\mu} \times \boldsymbol{B}$ $U = -\boldsymbol{\mu}.\boldsymbol{B}$

Fluids and Thermal Energy		
$R = A_1 v_1 = A_2 v_2$	$p + \rho g h + \frac{1}{2}\rho v^2 = const$ $p = p_A + \rho g h$	$\frac{F}{A} = Y\frac{\Delta L}{L}$
$pV = nRT$	$\rho = \frac{M}{V}$	$Q = mL$ $Q = mc\Delta T$
$pV^\gamma = const$ $\gamma = \frac{c_p}{c_V}$	$P = \sigma\varepsilon A T^4$	$\Delta U = Q + W$
$W = -\int p dV = -p\Delta V$	$W = -nRT\ln\frac{V_f}{V_i}$	$v_{RMS} = \sqrt{\frac{3kT}{m}}$

Modern Physics		
$\lambda_{MAX} T = 2898\ \mu m\ K$	$hf = K_{MAX} + \phi$	$E = hf = \frac{hc}{\lambda}$
$\lambda = \frac{h}{p}$	$c = f\lambda$	$\Delta x \Delta p \geq \frac{\hbar}{2}$
$\Delta\lambda = \frac{h}{mc}(1 - \cos\theta)$	$N(t) = N(0)e^{-\lambda t}$	$\lambda = \frac{\ln 2}{\tau_{1/2}}$
$E_n = -\frac{h^2}{8mL^2}n^2$	$r_n = \frac{4\pi\epsilon_o\hbar^2}{me^2}n^2 = a_o n^2$	$\nu_n = c\alpha_{em}\frac{1}{n}$
$E_n = -\frac{13.6\ Z^2}{n^2}$	$a_o = \frac{\epsilon_o h^2}{\pi m e^2} = 52.92\ pm$	$\alpha_{em} = \frac{e^2}{4\pi\epsilon_o\hbar c} \approx \frac{1}{137}$
$f = cR\left(\frac{1}{n_2^2} - \frac{1}{n_1^2}\right)$	$r = (1.2 \times 10^{-15} m)A^{\frac{1}{3}}$	$\frac{B.E.}{c^2} = (A - Z)m_n + Zm_p - m_{nucleus}$

Library Course Work Collections

Author/s:
Physics

Title:
Physics 2: Physical Science & Technology, 2018, Semester 2, PHYC10004

Date:
2018

Persistent Link:
http://hdl.handle.net/11343/220975